重要事项 /

1.图示尺寸与实物尺寸可能略有差异，本公司有权修改或取代上述产品，恕不另行通知。
2.有关工程项目的具体尺寸数据请与本厂联系确认。
3.由于印刷关系，正式产品的颜色与所示的图片有部分差异，一切产品以实物为准。

轻质粒子科技有限责任公司
LIGHT PARTICLES TECHNOLOGY CO., LTD.

Tel:133 4887 5780 E-mail:sales@light-particles.com
Address: No. 20, Section 1, Tongda East Road, Dayi County, Chengdu, Sichuan Province, P.R. China.

选轻质粒子 享真空无漏
Choose Light-Particles, Enjoy Perfect Vacuum.

凭质造非凡 得稳控随行
Engineered for Excellence, Designed for Effortless Control.

Professional valve and
pipe fitting manufacturer

真空系统生态零部件提供商



轻质粒子科技有限责任公司
LIGHT PARTICLES TECHNOLOGY CO., LTD.



企业简介 | About Us

轻质粒子科技有限公司专注于高端真空配件的研发与制造，服务于真空设备公司及重点终端用户。我们的团队由来自美国、日本、欧洲、中国、巴西、以色列、新加坡等地的全球顶尖科学家与工程师专家组成，他们在极端工艺环境下，攻克了PVD、PECVD、ALD、CVD、蚀刻及热处理等领域的核心难题，专业经验覆盖半导体、精密光学、医疗及航空航天等多个前沿产业。

我们主营真空阀门、管道连接件及腔体等关键配件，全面遵循ISO-KF、ISO-K、ISO-F、ISO-CF等国际标准，确保产品品质与世界先进水平同步。凭借成熟的设计与制造体系，我们不仅提供标准化产品，更可提供专业的技术支持与定制服务。

公司拥有先进的制造与检测设备，以及经验丰富的技术团队，持续推动产品优化与创新。我们的配件已广泛应用于半导体、光伏、航天、生物医药等高科技领域。

我们致力于以可靠的品质、准时的交付和专业的服务，成为真空设备制造商及重点客户的首选合作伙伴。期待与您携手，共同推进真空技术的应用与发展。

Light Particle Technology Co., Ltd. specializes in the R&D and manufacturing of high-end vacuum components, serving vacuum equipment companies and key end-users. Our team includes top global scientists and engineering experts from the United States, Japan, Europe, China, Brazil, Israel, Singapore, and other regions. Working in extreme processing environments, they have overcome core challenges in areas such as PVD, PECVD, ALD, CVD, etching, and heat treatment, with professional expertise spanning multiple cutting-edge industries including semiconductors, precision optics, medical, and aerospace.

Our main products include critical components such as vacuum valves, pipeline fittings, and chambers. We strictly adhere to international standards like ISO-KF, ISO-K, ISO-F, and ISO-CF, ensuring our product quality matches world-class levels. Leveraging a mature design and manufacturing system, we provide not only standardized products but also professional technical support and customized service.

The company is equipped with advanced manufacturing and testing facilities, along with an experienced technical team, continuously driving product optimization and innovation. Our components are widely used in high-tech fields such as semiconductors, photovoltaics, aerospace, and biomedicine.

We are committed to becoming the preferred partner for vacuum equipment manufacturers and key clients through reliable quality, on-time delivery, and professional service. We look forward to collaborating with you to advance the application and development of vacuum technology

轻质粒子科技有限责任公司
LIGHT PARTICLES TECHNOLOGY CO., LTD.

VACUUM ANGLE VALVE-Pneumatically Actuated

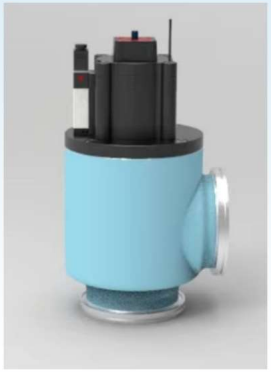

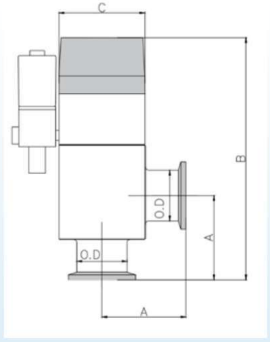

Specifications

- Nominal Diameter (DN): 63~160
- Valve Configuration: double acting
- Connection Flange: ISO-K
- Leak Rate: $1x10^{-10}$ Pa•m^3/s ($1x10^{-9}$ mbar•L/s)
- Actuation Type: Pneumatic
- Operating Pressure Range: 3.5 - 8 bar
- Typical Operating Pressure: 6 bar
- Solenoid Valve Voltage: DC24V, AC220V (Optional)
- Stem Seal Type: Bellows Seal or Shaft Seal
- Body Material: Al 6063-T6, Stainless Steel (Optional)
- Seal Material: FKM (Fluorocarbon Rubber)
- Mounting Orientation: Any
- Heat Resistance Temperature: 150°C
- Conductance: 4.5 L/s - 85 L/s
- Service Life: ⩾1million cycles

The key performance indicators for angle valves are reliability and variability. The HVT Angle Valve series combines both. The series has been designed to allow the construction of large sizes for high and even slightly contaminated gas volume flows. Sizes of up to DN 900 mm have been produced so far.

Key dimensions(mm)

Model No	A(mm)	B(mm)	C(mm)	D(mm)	O.D(mm)	Parts No.
GDQ-J63K/B6	88	298	127	164	78	63A31D2/FA
GDQ-J80K/B6	90	305	136	164	92	80A31D2/FA
GDQ-J100K/B6	108	328	165	190	113	100A31D2/FA
GDQ-J160K/B6	138	376	223	250	164	160A31D2/FA

Tel:133 4887 5780 E-mail:sales@light-particles.com
Address: No. 20, Section 1, Tongda East Road, Dayi County, Chengdu, Sichuan Province, P.R. China.

轻质粒子科技有限责任公司
LIGHT PARTICLES TECHNOLOGY CO., LTD.

VACUUM ANGLE VALVE-Pneumatically Actuated

Compact Design: Small valve body with high conductance.
Dust-proof Design: Reduces dust accumulation in the cavity and extends maintenance Intervals.
Low Outgassing Design: Shortens vacuum pump evacuation time.
Contamination-resistant Design: Free from sensitive heavy metals, minimizing semiconductor chip contamination.
Long-life Design: Capable of up to 10 million open/close cycles under specified operating conditions.

Nominal Voltage				
DC	24V			
AC	220V (option)			
Vacuum Flange Type	ISO-K63	ISO-K80	ISO-K100	ISO-K160
Actuator	Pneumatic, double acting – with solenoid valve – with position indicator			
CDA Supply Line Size	Ø6mm (option others)			
CDA pressure for pneumatic	$3.5~8x10^5$Pa			
Volume of air cylinder	$168cm^3$	$202cm^3$	$226cm^3$	$226cm^3$
Valve stroke	35mm	42mm	46mm	46mm
Molecular flow conductance	165L/S	200L/S	300 L/S	850 L/S
Actuation frequency	< 10/min	< 10/min	< 10/min	< 10/min
Closing time	< 0.2s			
Opening time	< 0.2s			
Cycles until first service	⩾2 million			
Leak rate	$1x10^{-10}$Pa·m^3/sec ($1x10^{-9}$mbar·L/sec)			
Pressure range	Max. 5bar(absolute) Min. $1x10^{-8}$mbar			
Differential pressure on the plate:	Δp			
in closing direction	⩽5bar			
in opening direction	⩽2bar			
Temperature				
Working environment	0℃~50℃			
Valve body	⩽150℃			
Pneumatic Cylinder	150℃			
Actuator	150℃			
Solenoid Valve	20~70℃			
Mounting position	Any			
Conductance flow direction	L type			
Material				
Valve body	Al 6063-T6 (Green low carbon footprint)			
Mechanism	SUS 304/SUS 316L			
Gate	Spring steel			
Seal	FKM			
Junction box	ABS/PC			
Visual Position Indicator	OMRON (lifetime⩾30million cycles)			
Magnetic Position Indicator (option)	DMS			
Weight	3kg	5kg	7kg	13.9kg

Tel:133 4887 5780 E-mail:sales@light-particles.com
Address: No. 20, Section 1, Tongda East Road, Dayi County, Chengdu, Sichuan Province, P.R. China.

VACUUM ANGLE VALVE-Pneumatically Actuated



Performance Specifications

- Nominal Diameter (DN): 16~50
- Valve Configuration: Normally Closed; Normally Open
- Connection Flange: KF
- Leak Rate: $1x10^{-10}$ Pa•m^3/s ($1x10^{-9}$ mbar•L/s)
- Actuation Type: Pneumatic
- Operating Pressure Range: 3.5 - 8 bar
- Typical Operating Pressure: 6 bar
- Solenoid Valve Voltage:DC24V, AC220V (Optional)
- Stem Seal Type: Bellows Seal or Shaft Seal
- Body Material: Al 6063-T6, Stainless Steel (Optional)
- Seal Material: FKM (Fluorocarbon Rubber)
- Mounting Orientation: Any
- Heat Resistance Temperature: 150°C
- Conductance: 4.5 L/s - 85 L/s
- Service Life: ⩾1million cycles

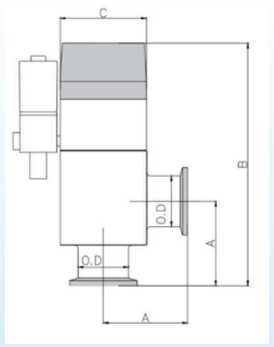

The GDQ series electro-pneumatic high vacuum angle valve is a key component in vacuum systems. It uses electrical signals for valve switching control and relies on compressed air as the driving force to lift the valve plate. In the event of power or compressed air loss, the valve automatically closes via spring force.As an on-off mechanism in high vacuum pipelines, this valve offers stable operation, reliable sealing, and a long service life, making it an ideal choice for automated vacuum equipment. It is suitable for media such as air or low-corrosive gases, with an operating pressure range of 1×10^{-6} Pa to 2×10^{-5} P

Key dimensions(mm)

Model No	A(mm)	B(mm)	C(mm)	D(mm)	O.D(mm)	Parts No.
GDQ-J16KF/B4	40	40	40	86	21	16A61D2/FA
GDQ-J25KF/B4	50	50	51	103	30	25A61D2/FA
GDQ-J40KF/B4	65	65	76	124	45	40A61D2/FA
GDQ-J50KF/B4	70	221	80	142	57	50A61D2/FA

Tel:133 4887 5780 E-mail:sales@light-particles.com
Address: No. 20, Section 1, Tongda East Road, Dayi County, Chengdu, Sichuan Province, P.R. China.

轻质粒子科技有限责任公司
LIGHT PARTICLES TECHNOLOGY CO., LTD.

VACUUM ANGLE VALVE- Pneumatically Actuated

Compact Design: Small valve body with high conductance.
Dust-proof Design: Reduces dust accumulation in the cavity and extends maintenance intervals.
Low Outgassing Design: Shortens vacuum pump evacuation time.
Contamination-resistant Design: Free from sensitive heavy metals, minimizing semiconductor chip contamination.
Long-life Design: Capable of up to 10 million open/close cycles under specified operating conditions.

Nominal Voltage				
DC	24V			
AC	220V（option）			
Vacuum Flange Type	KF16	KF25	KF40	KF50
Actuator	pneumatic, single acting with closing spring - with solenoid - with position indicator “open” and “closed”			
CDA Supply Line Size	Ø6mm（option others）			
CDA pressure for pneumatic	$3.5\sim8x10^5$Pa			
Volume of air cylinder	$4cm^3$	$11cm^3$	$35cm^3$	$50cm^3$
Valve stroke	6.1mm	8.6mm	14.1mm	21.2mm
Molecular flow conductance	5L/S	20L/S	50 L/S	85 L/S
Actuation frequency	< 10/min	< 10/min	< 10/min	< 10/min
Closing time	< 0.2s			
Opening time	< 0.2s			
Cycles until first service	⩾3 million（Tmax 80°C, differential pressure max. 1 bar）			
Leak rate	$1x10^{-10}$Pa·m^3/sec（$1x10^{-9}$mbar·L/sec）			
Pressure range	Max. 5bar(absolute)			
	Min. $1x10^{-8}$mbar			
Differential pressure on the plate:	Δp			
in closing direction	⩽5bar			
in opening direction	⩽2bar			
Temperature				
Working environment	0℃~50℃			
Valve body	⩽150℃			
Pneumatic Cylinder	150℃			
Actuator	150℃			
Solenoid Valve	20~70℃			
Mounting position	Any			
Conductance flow direction	L type			
Material				
Valve body	Al 6063-T6（Green low carbon footprint）			
Mechanism	SUS 304/SUS 316L			
Gate	Spring steel			
Seal	FKM			
Junction box	ABS/PC			
Visual Position Indicator	OMRON （lifetime⩾30million cycles）			
Magnetic Position Indicator（option）	DMS			
Weight	0.35kg	0.78kg	1.62kg	1.96kg

Tel:133 4887 5780 E-mail:sales@light-particles.com
Address: No. 20, Section 1, Tongda East Road, Dayi County, Chengdu, Sichuan Province, P.R. China.

VACUUM In-line VALVE- Manually Actuated



Specifications

- Nominal Diameter (DN): 16–50 mm
- Connection Flange: KF
- Leak Rate: 1×10^{-10} Pa•m^3/s (1×10^{-9} mbar•L/s)
- Actuation Type: Manual
- Stem Seal Type: Bellows Seal
- Body Material: Al 6063-T6, Stainless Steel (Optional)
- Seal Material: FKM (Fluorocarbon Rubber)
- Mounting Orientation: Any
- Heat Resistance Temperature: 150 °C
- Conductance: 4.5–85 L/s
- Service Life: ⩾1 million cycles

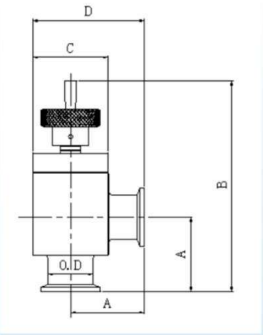

The GD-J ISO-KF/B series high vacuum manual angle valve is one of the key components in vacuum systems. It operates by rotating the knob upward or downward to open or close the valve plate, and features an ISO-KF standard flange interface for quick installation. This valve can serve as an on-off mechanism in high vacuum pipelines.
The valve is equipped with limit devices for both upward and downward movements of the valve plate, ensuring the longevity of the valve plate seal and bellows. It is suitable for media such as air or low-corrosive gases.

Key dimensions(mm)

Model No	A(mm)	B(mm)	C(mm)	D(mm)	O.D(mm)	Parts No.
GD-J16KF/B4	40	131	40	60	21	16A600/FE
GD-J25KF/B4	50	140	51	75.5	30	25A600/FE
GD-J40KF/B4	65	188	76	103	45	40A600/FE
GD-J50KF/B4	70	227	88	114	57	50A600/FE

Tel:133 4887 5780 E-mail:sales@light-particles.com
Address: No. 20, Section 1, Tongda East Road, Dayi County, Chengdu, Sichuan Province, P.R. China.

轻质粒子科技有限责任公司
LIGHT PARTICLES TECHNOLOGY CO., LTD.

VACUUM ANGLE VALVE-Manual Actuated

Compact Design: Small valve body with high conductance.
Dust-proof Design: Minimizes internal dust accumulation and extends maintenance intervals.
Low Outgassing Design: Reduces vacuum pump evacuation time.
Contamination-resistant Design: Free from sensitive heavy metals, mitigating semiconductor chip contamination.
Long-life Design: Capable of up to 10 million open/close cycles under specified operating conditions.
Upper Limit Stop Design: Restricts travel distance to prevent bellows overcompression.
Indicator Design: Provides intuitive visual open/close position feedback with user-friendly interface.

Flange type	KF16	KF25	KF40	KF50
Actuator	Manual actuator			
Valve stroke	6.1mm	8.6mm	14.1mm	21.2mm
Feedthrough	Shaft feedthrough			
Conductance (molecular flow)	5L/S	20L/S	50 L/S	85 L/S
Actuation frequency	< 10/min	< 10/min	< 10/min	< 10/min
Cycles until first service	⩾1 million (Tmax 80°C, differential pressure max. 1 bar)			
Leak rate	$1x10^{-10}$Pa·m^3/sec ($1x10^{-9}$mbar·L/sec)			
Pressure range	Max. 5bar(absolute)			
	Min. $1x10^{-8}$mbar			
Differential pressure on the plate:	Δp			
in closing direction	⩽5bar			
in opening direction	⩽2bar			
Temperature				
Working environment	0℃~50℃			
Valve body	⩽150℃			
Hand wheel	> 150℃			
Actuator	150℃			
Screw Rod	> 150℃			
Mounting position	Any			
Conductance flow direction	L type			
Material				
Valve body	Al 6063-T6 (Green low carbon footprint)			
Mechanism	Al 6063-T6 (Green low carbon footprint)			
Bellows Assembly	SUS 304/SUS 316L			
Threaded Insert	Brass			
Valve Knob	Al 6063-T5			
Lead Screw	SUS 304			
Seal	FKM			
Weight	0.35kg	0.52kg	1.05kg	2.08kg

Tel:133 4887 5780 E-mail:sales@light-particles.com
Address: No. 20, Section 1, Tongda East Road, Dayi County, Chengdu, Sichuan Province, P.R. China.

VACUUM ANGLE VALVE-Manually Actuated



Specifications

- Nominal Diameter (DN): 63–160mm
- Connection Flange: KF
- Leak Rate: 1×10^{-10} Pa·m^3/s (1×10^{-9} mbar·L/s)
- Actuation Type: Manual
- Stem Seal Type: Bellows Seal
- Body Material: Al 6063-T6, Stainless Steel (Optional)
- Seal Material: FKM (Fluorocarbon Rubber)
- Mounting Orientation: Any
- Heat Resistance Temperature: 150 °C
- Conductance: 165–850L/s
- Service Life: ⩾1 million cycles

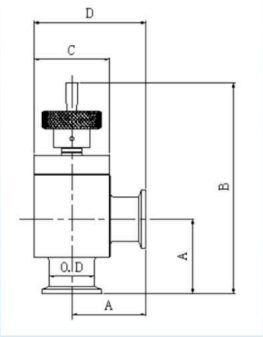

The GD-J ISO-KF/B series high vacuum manual angle valve is one of the key components in vacuum systems. It operates by rotating the knob upward or downward to open or close the valve plate, and features an ISO-KF standard flange interface for quick installation. This valve can serve as an on-off mechanism in high vacuum pipelines.
The valve is equipped with limit devices for both upward and downward movements of the valve plate, ensuring the longevity of the valve plate seal and bellows. It is suitable for media such as air or low-corrosive gases.

Key dimensions(mm)

Model No	A(mm)	B(mm)	C(mm)	D(mm)	O.D(mm)	Parts No.
GD-J63K/B6	88	250	127	151.5	78	63A300/FE
GD-J80K/B6	90	256.6	136	158	92	80A300/FE
GD-J100K/B6	108	270	165	190.5	113	100A300/FE
GD-J160K/B6	138	324.5	223	249.5	164	160A300/FE

Tel:133 4887 5780 E-mail:sales@light-particles.com
Address: No. 20, Section 1, Tongda East Road, Dayi County, Chengdu, Sichuan Province, P.R. China.

轻质粒子科技有限责任公司
LIGHT PARTICLES TECHNOLOGY CO., LTD.

VACUUM+ANGLE+VALVE-+Manual+Actuated

Compact Design: Small valve body with high conductance.
Dust-proof Design: Minimizes internal dust accumulation and extends maintenance intervals.
Low Outgassing Design: Reduces vacuum pump evacuation time.
Contamination-resistant Design: Free from sensitive heavy metals, mitigating semiconductor chip contamination.
Long-life Design: Capable of up to 10 million open/close cycles under specified operating conditions.
Upper Limit Stop Design: Restricts travel distance to prevent bellows overcompression.
Indicator Design: Provides intuitive visual open/close position feedback with user-friendly interface.

Flange type	ISO-K63	ISO-K80	ISO-K100	ISO-K160
Actuator	Manual actuator			
Valve stroke	35mm	42mm	46mm	46mm
Feedthrough	Shaft feedthrough			
Conductance (molecular flow)	165L/S	200L/S	300 L/S	850 L/S
Actuation frequency	< 10/min	< 10/min	< 10/min	< 10/min
Cycles until first service	⩾1 million			
Leak rate	$1x10^{-10}$Pa·m^3/sec (1x10^{-9}mbar·L/sec)			
Pressure range	Max. 5bar(absolute)			
	Min. $1x10^{-8}$mbar			
Differential pressure on the plate:	Δp			
in closing direction	⩽5bar			
in opening direction	⩽2bar			
Temperature				
Working environment	0℃~50℃			
Valve body	⩽150℃			
Hand wheel	> 150℃			
Actuator	150℃			
Screw Rod	> 150℃			
Mounting position	Any			
Conductance flow direction	L type			
Material				
Valve body	Al 6063-T6 (Green low carbon footprint)			
Mechanism	Al 6063-T6 (Green low carbon footprint)			
Bellows Assembly	SUS 304/SUS 316L			
Threaded Insert	Brass			
Valve Knob	Al 6063-T5			
Lead Screw	SUS 304			
Seal	FKM			
Weight	3.2kg	4.6kg	5.9kg	7.6kg

Tel:133 4887 5780 E-mail:sales@light-particles.com
Address: No. 20, Section 1, Tongda East Road, Dayi County, Chengdu, Sichuan Province, P.R. China.

VACUUM VALVE – Gate Valve

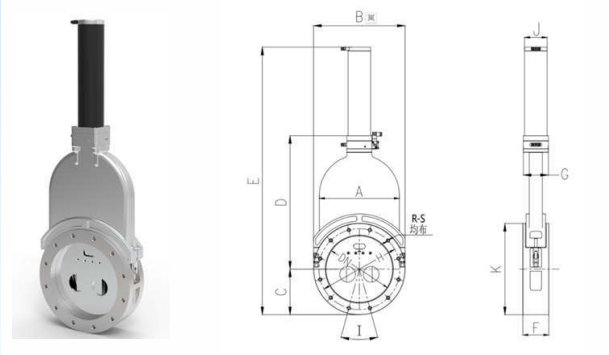

High vacuum gate valves are critical components in vacuum systems used to control gas flow, with their functions and features directly impacting the system's sealing performance, stability, and operational efficiency.

Core Functions:

High Vacuum Sealing Performance: Utilizes high-density valve body materials, precision surface processing, and grinding, combined with an excellent elastomer sealing structure to prevent micro-leakage.

Medium Isolation and Flow Control: The linear motion of the gate enables full opening or closing, with an unobstructed flow path that minimizes flow resistance, making it suitable for high-flow scenarios.

Pressure Difference Resistance: Designed to withstand high pressure differences, the gate and valve seat locking mechanism prevents reverse pressure impact, making it suitable for switching between vacuum and atmospheric conditions.

Rapid Opening/Closing and Automation: Short opening and closing times meet process cycle requirements.

Dimensional Table (mm)

DN	A	B	C	D	E	F
63	99	131	65.5	155	470	60
80	116	146	73	173	446	60
100	139	166	83	203	508	60
160	192	237	118.5	280	666	70
200	239	290	145	363	830	80
250	306	352	176	453	1025	100
320	368	428	214	558	1243	120
350	430	467	233.5	604	1326	120

Tel:133 4887 5780 E-mail:sales@light-particles.com
Address: No. 20, Section 1, Tongda East Road, Dayi County, Chengdu, Sichuan Province, P.R. China.

轻质粒子科技有限责任公司
LIGHT PARTICLES TECHNOLOGY CO., LTD.

VACUUM VALVE – Gate Valve

Features:
Embedded design with a compact structure
High-density materials with extremely low outgassing rate
Buffered three-dimensional airflow path design
Industry-leading actuator and solenoid valve options

Advantages:
Requires minimal installation space
Extremely low leakage rate
Excellent and stable dynamic balancing performance
Extended maintenance-free operation cycle

Nominal Voltage	
DC	24V
AC	220V（option）
Vacuum Flange Type	ISO-F，JIS
Actuator	0
CDA Supply Line Size	Ø6mm
Actuation time	— closing < 5s
	— opening < 5s
Cycles until first service	⩾100000 (unheated and under clean conditions)
Leak rate	$1x10^{-10}$Pa·m^3/sec（$1x10^{-9}$mbar·L/sec）
Pressure range	Max 1.6bar(absolute)
	Min $1x10^{-8}$mbar
Differential Pressure	Δp
On the Gate	⩽1.6bar
At Opening	⩽30mbar
Temperature	
Working environment	0℃~50℃
Valve body	⩽150℃
Pneumatic Cylinder	80℃
Actuator	80℃
Solenoid Valve	20~70℃
Mounting position	Any
Conductance flow direction	Triangle Lable
Material	
Valve body	6061-T6
Mechanism	6061-T6
Gate	7075
Seal	FKM(Viton)，Oring
Junction box	ABS/PC
Visual Position Indicator	OMRON （lifetime ⩾30million times）
Magnetic Position Indicator（option）	DMS

Tel:133 4887 5780 E-mail:sales@light-particles.com
Address: No. 20, Section 1, Tongda East Road, Dayi County, Chengdu, Sichuan Province, P.R. China.